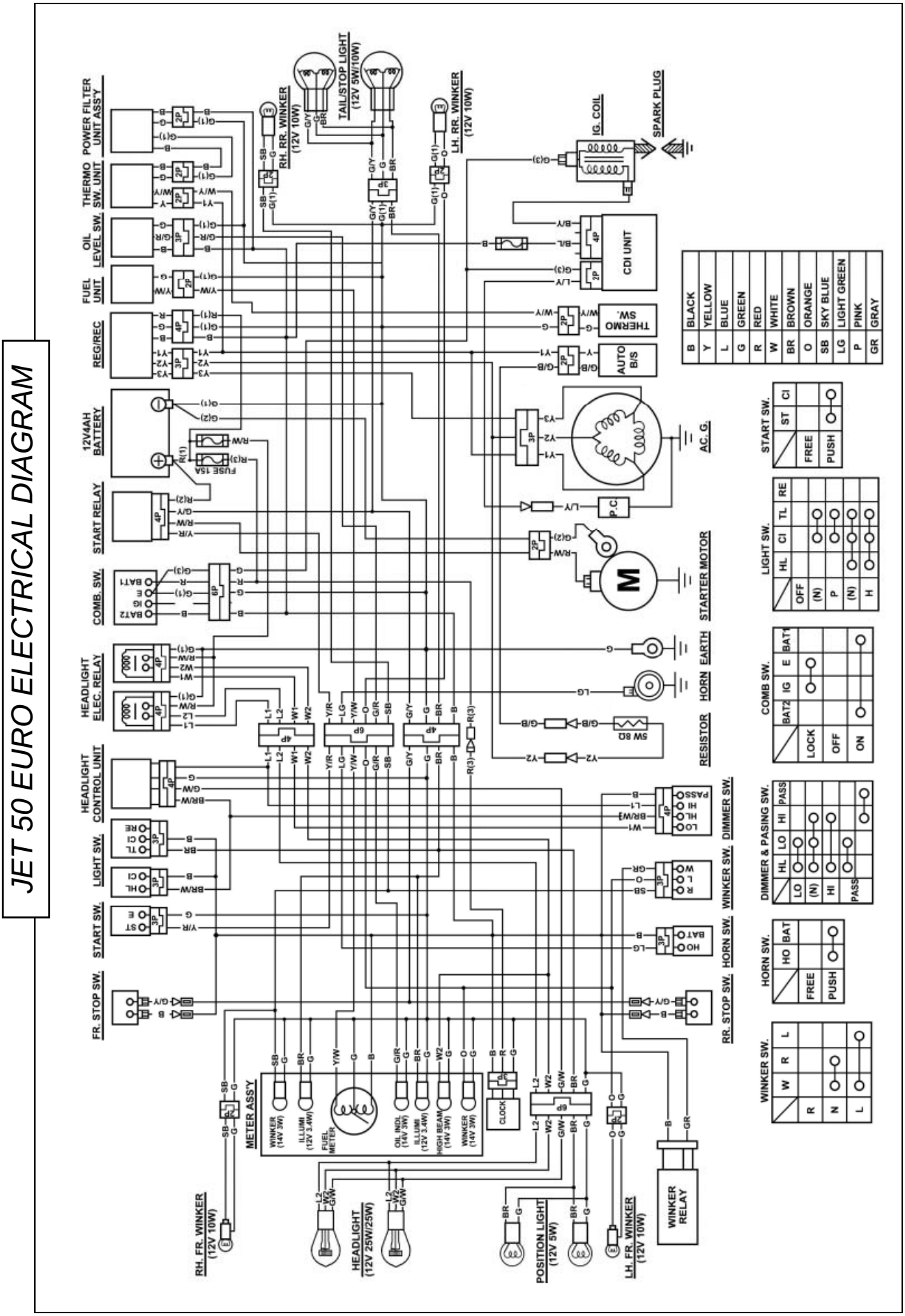16. ELECTRICAL DIAGRAM